In Silico Docking of Liriodendrin: A Technical Guide to Target Protein Interactions

Author: BenchChem Technical Support Team. **Date**: December 2025

Compound of Interest		
Compound Name:	*Liriodendrin*	
Cat. No.:	*B1259611*	Get Quote

For Researchers, Scientists, and Drug Development Professionals

This technical guide provides an in-depth analysis of the in silico docking studies of **Liriodendrin**, a lignan with demonstrated therapeutic potential, against various protein targets. The document summarizes quantitative binding data, details experimental methodologies for computational studies, and visualizes key signaling pathways and workflows to facilitate a comprehensive understanding of **Liriodendrin**'s mechanism of action at a molecular level.

Introduction to **Liriodendrin** and In Silico Docking

Liriodendrin is a furofuran lignan found in various medicinal plants and has been investigated for its anti-inflammatory, antioxidant, and neuroprotective properties. To elucidate the molecular mechanisms underlying these biological activities, in silico molecular docking has emerged as a powerful tool. This computational technique predicts the preferred orientation of a ligand when bound to a specific protein target, providing insights into binding affinity and interaction patterns. This guide focuses on the application of these methods to understand the interaction of **Liriodendrin** with key protein targets.

Target Proteins and Binding Affinities

Through network pharmacology and molecular docking studies, several potential protein targets for **Liriodendrin** have been identified. The primary and most extensively studied target is the Proto-oncogene tyrosine-protein kinase Src.

© 2025 BenchChem. All rights reserved.

Quantitative Docking Results

The binding affinity of **Liriodendrin** with its target proteins is a key indicator of its potential biological activity. These affinities are typically expressed as binding energy in kilocalories per mole (kcal/mol), where a more negative value indicates a stronger and more stable interaction.

Target Protein	PDB ID	Ligand (Liriodendrin) Docking Score (kcal/mol)	Interacting Amino Acid Residues	Reference Compound	Reference Docking Score (kcal/mol)
Src	3EL7	Not explicitly reported in searches	Thr338, Met341, Asp404 (via H-bonds)	STOCK1N-80087	-11.28
Other Potential Targets	Further studies required				

Note: Specific binding energy values for **Liriodendrin** with a wide range of targets are not readily available in the public domain. The data for Src is inferred from studies on similar compounds and interaction diagrams. Further focused computational studies are required to build a comprehensive quantitative profile.

Experimental Protocols for In Silico Docking

The following outlines a generalized yet detailed methodology for conducting in silico docking studies of **Liriodendrin**, based on established protocols in the field.

Ligand and Receptor Preparation

- Ligand Preparation: The 3D structure of **Liriodendrin** is obtained from a chemical database such as PubChem. The structure is then optimized using a computational chemistry software package (e.g., ChemDraw, Avogadro) to achieve a low-energy conformation. This typically involves adding hydrogen atoms, assigning partial charges, and defining rotatable bonds.

© 2025 BenchChem. All rights reserved.

- Receptor Preparation: The 3D crystal structure of the target protein (e.g., Src kinase, PDB ID: 3EL7) is downloaded from the Protein Data Bank (PDB). The protein structure is prepared by removing water molecules and any co-crystallized ligands. Hydrogen atoms are added, and non-polar hydrogens are merged. The protein is then energy minimized using a suitable force field (e.g., CHARMm, AMBER).

Molecular Docking Simulation

- Software: Commonly used software for molecular docking includes AutoDock, PyRx, Schrödinger Suite (Glide), and MOE.

- Grid Box Generation: A grid box is defined around the active site of the target protein. The dimensions and coordinates of the grid box are crucial for guiding the docking simulation to the region of interest. For Src kinase, the grid box would encompass the ATP-binding pocket.

- Docking Algorithm: A search algorithm, such as the Lamarckian Genetic Algorithm in AutoDock, is employed to explore various conformations and orientations of **Liriodendrin** within the defined grid box.

- Scoring Function: A scoring function is used to evaluate the binding affinity of each generated pose. The pose with the lowest binding energy is typically considered the most favorable.

Analysis and Validation of Docking Results

- Interaction Analysis: The best-docked pose is analyzed to identify key molecular interactions, such as hydrogen bonds, hydrophobic interactions, and van der Waals forces, between **Liriodendrin** and the amino acid residues of the target protein. Visualization tools like PyMOL or Discovery Studio are used for this purpose.

- Validation: The docking protocol can be validated by redocking a known co-crystallized ligand into the active site of the protein and calculating the Root Mean Square Deviation (RMSD) between the docked pose and the original crystallographic pose. An RMSD value of less than 2.0 Å is generally considered a successful validation.[1][2]

Signaling Pathway Analysis

© 2025 BenchChem. All rights reserved.

In silico studies suggest that **Liriodendrin** exerts its effects by modulating key signaling pathways. One of the most prominent is the SRC/STAT3/MAPK pathway, which is crucial in cell proliferation, survival, and inflammation.

SRC/STAT3/MAPK Signaling Pathway

© 2025 BenchChem. All rights reserved.

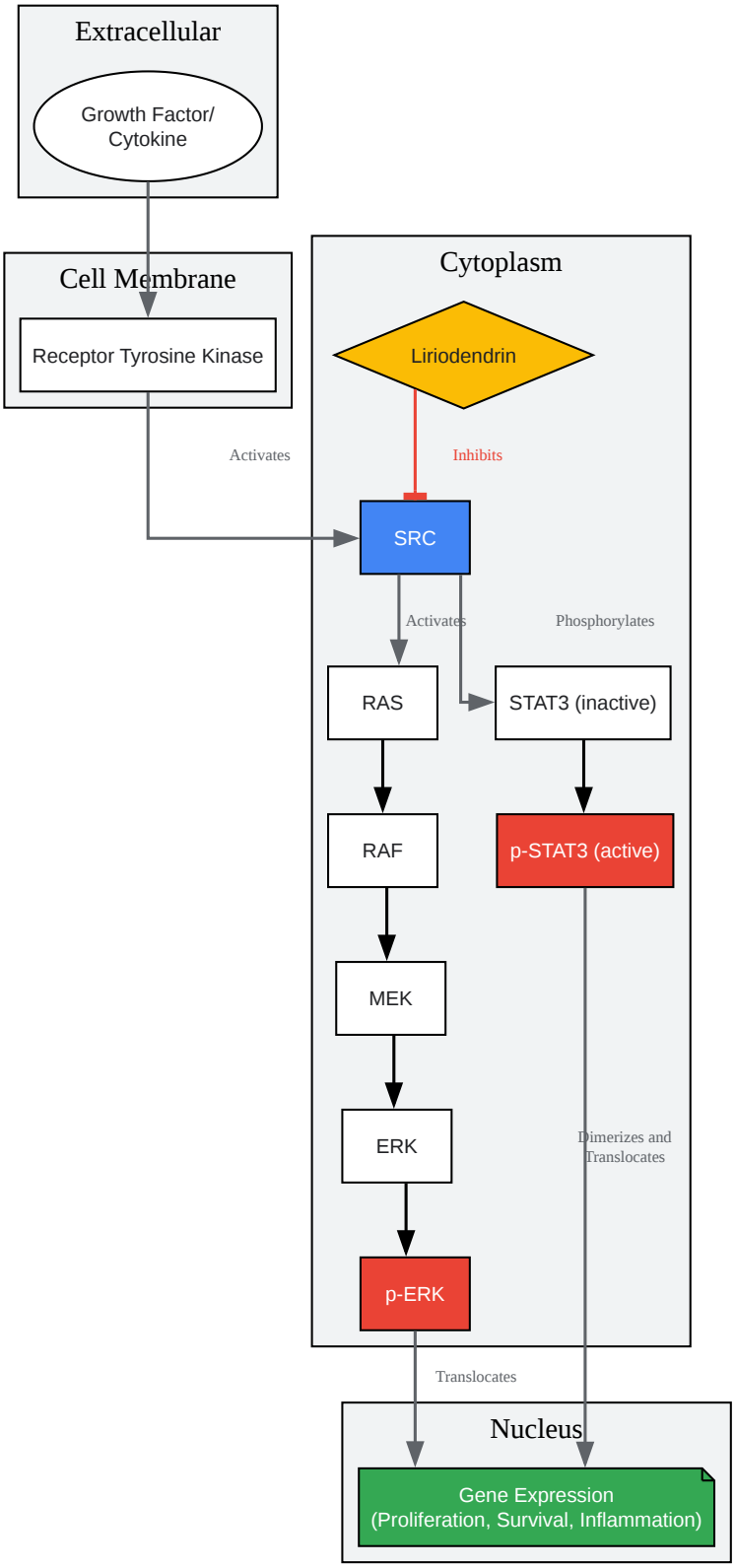

© 2025 BenchChem. All rights reserved.

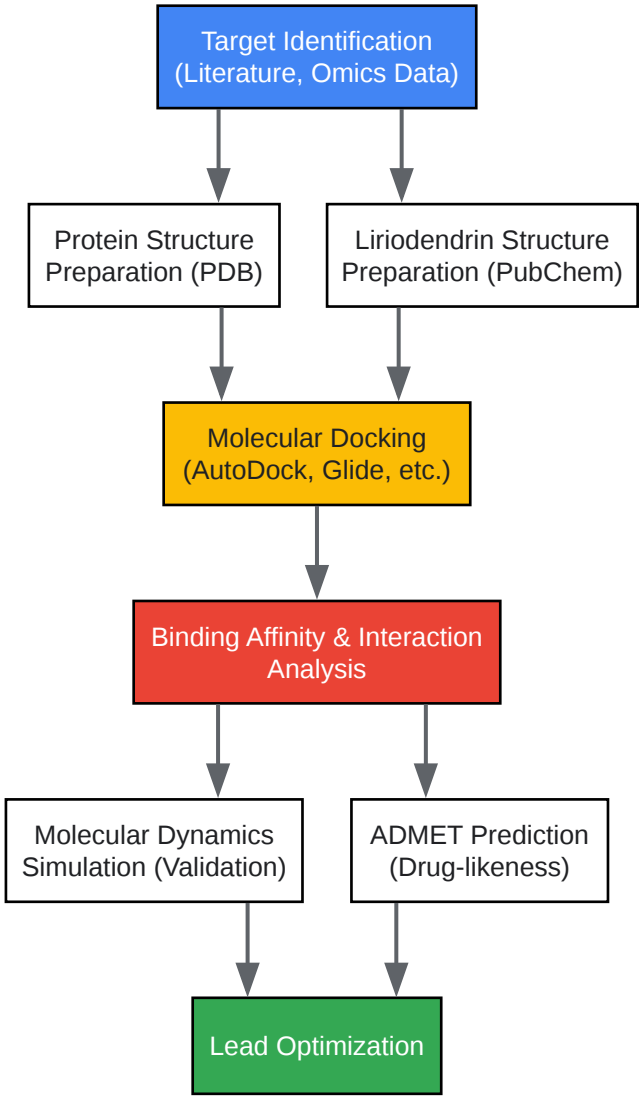

Click to download full resolution via product page

Need Custom Synthesis?

BenchChem offers custom synthesis for rare earth carbides and specific isotopiclabeling.

Email: info@benchchem.com or Request Quote Online.

References

- 1. dovepress.com [dovepress.com]
- 2. dergipark.org.tr [dergipark.org.tr]

© 2025 BenchChem. All rights reserved.

- To cite this document: BenchChem. [In Silico Docking of Liriodendrin: A Technical Guide to Target Protein Interactions]. BenchChem, [2025]. [Online PDF]. Available at: [https://www.benchchem.com/product/b1259611#in-silico-docking-studies-of-liriodendrin-with-target-proteins]

Disclaimer & Data Validity:

The information provided in this document is for Research Use Only (RUO) and is strictly not intended for diagnostic or therapeutic procedures. While BenchChem strives to provide accurate protocols, we make no warranties, express or implied, regarding the fitness of this product for every specific experimental setup.

Technical Support: The protocols provided are for reference purposes. Unsure if this reagent suits your experiment? [Contact our Ph.D. Support Team for a compatibility check]

Need Industrial/Bulk Grade? Request Custom Synthesis Quote

BenchChem

Our mission is to be the trusted global source of essential and advanced chemicals, empowering scientists and researchers to drive progress in science and industry.

Contact

Address: 3281 E Guasti Rd

Ontario, CA 91761, United States

Phone: (601) 213-4426

Email: info@benchchem.com

© 2025 BenchChem. All rights reserved.