Application Notes and Protocols for Molecular Docking Simulation of CYP1B1 Inhibitors

Author: BenchChem Technical Support Team. **Date**: December 2025

Compound of Interest		
Compound Name:	*CYP1B1 ligand 3*	
Cat. No.:	*B15573256*	*Get Quote*

For Researchers, Scientists, and Drug Development Professionals

Introduction

Cytochrome P450 1B1 (CYP1B1) is a crucial enzyme in the metabolism of a wide range of endogenous and exogenous compounds, including procarcinogens and steroid hormones. Its overexpression in various tumor types and its role in the development of resistance to chemotherapy have established CYP1B1 as a significant target for anticancer drug development. Molecular docking simulations are a powerful computational tool used to predict the binding orientation and affinity of small molecules (ligands) to the active site of a protein. This document provides detailed application notes and protocols for performing molecular docking simulations of potential inhibitors against human CYP1B1.

Data Presentation: Quantitative Analysis of CYP1B1 Inhibitors

The following tables summarize quantitative data from various studies, providing a comparative overview of the binding affinities and inhibitory activities of known CYP1B1 inhibitors.

Table 1: Docking Scores and Binding Energies of Selected CYP1B1 Inhibitors

© 2025 BenchChem. All rights reserved.

Inhibitor Class	Compound	Docking Score (kcal/mol)	Binding Energy (kcal/mol)	Key Interacting Residues	PDB ID of CYP1B1
Flavonoids	α-Naphthoflavone (ANF)	-8.5	Not Reported	PHE 231, PHE 268	3PM0
Galangin (3,5,7-trihydroxyflavone)	Not Reported	Not Reported	Not Reported	Homology Model	
Stilbenes	Resveratrol	-9.10	Not Reported	Not Reported	Homology Model
Pinostilbene	-10.50	Not Reported	Not Reported	Homology Model	
Deoxyrhapontigenin	-8.50	Not Reported	Not Reported	Homology Model	
Pterostilbene	-8.40	Not Reported	Not Reported	Homology Model	
Benzoxazolinones	Compound R-7	Not Reported	Not Reported	Not Reported	Not Reported
Compound R-8	Not Reported	Not Reported	Not Reported	Not Reported	
Repurposed Drugs	Chlorprothixene	< -8.5	Not Reported	PHE 134, PHE 231, PHE 268	3PM0
Nadifloxacin	< -8.5	Not Reported	PHE 134, PHE 231, PHE 268	3PM0	
Ticagrelor	< -8.5	Not Reported	PHE 134, PHE 231, PHE 268	3PM0	

© 2025 BenchChem. All rights reserved.

Table 2: In Vitro Inhibitory Activity of Selected CYP1B1 Inhibitors

Inhibitor Class	Compound	IC50 (μM)	Assay Type
Flavonoids	Galangin (3,5,7-trihydroxyflavone)	0.003	EROD
Benzoxazolinones	Compound R-7	0.06	EROD
Compound R-8	0.09	EROD	
Repurposed Drugs	Chlorprothixene	0.07 - 3.00	EROD
Nadifloxacin	0.07 - 3.00	EROD	
Ticagrelor	0.07 - 3.00	EROD	

Experimental Protocols: Molecular Docking of CYP1B1 Inhibitors

This section provides a detailed, step-by-step protocol for performing molecular docking of a potential inhibitor to the human CYP1B1 enzyme using AutoDock Vina. The crystal structure of human CYP1B1 in complex with α-naphthoflavone (PDB ID: 3PM0) is recommended as the starting point for receptor preparation.[1]

Part 1: Preparation of the Receptor (CYP1B1)

- Obtain the Protein Structure:
  - Download the PDB file for human CYP1B1, for instance, PDB ID: 3PM0, from the RCSB Protein Data Bank (21]
- Prepare the Protein for Docking:
  - Use molecular visualization software such as PyMOL, Chimera, or Discovery Studio to prepare the protein.
  - Remove all water molecules and any co-crystallized ligands (e.g., α-naphthoflavone in 3PM0).

© 2025 BenchChem. All rights reserved.

- If the protein has multiple chains, retain only the chain of interest (typically chain A for 3PM0).
- Add polar hydrogen atoms to the protein.
- Assign partial charges (e.g., Gasteiger charges).
- Save the prepared protein structure in PDBQT format, which is required by AutoDock Vina.

Part 2: Preparation of the Ligand (Inhibitor)

- Obtain or Draw the Ligand Structure:
  - The 3D structure of the inhibitor can be obtained from databases like PubChem or ZINC, or drawn using chemical drawing software like ChemDraw or Marvin Sketch.
- Prepare the Ligand for Docking:
  - Use a tool like Open Babel or the ligand preparation modules within AutoDockTools to convert the ligand file (e.g., MOL, SDF) to the PDBQT format.
  - This process typically involves adding hydrogens, assigning partial charges, and defining the rotatable bonds.

Part 3: Grid Box Generation

The grid box defines the three-dimensional space in the receptor's active site where the docking algorithm will search for binding poses of the ligand.

- Identify the Active Site:
  - The active site of CYP1B1 in the 3PM0 structure is located in a hydrophobic cavity near the heme group. Key residues lining this site include Phe134, Phe231, and Phe268.[3]
  - In the case of PDB ID 3PM0, the grid box can be centered on the position of the co-crystallized ligand, α-naphthoflavone.

© 2025 BenchChem. All rights reserved.

- Define Grid Box Parameters:
  - Using AutoDockTools, define the center and dimensions of the grid box. A common approach is to create a box that encompasses the entire active site.
  - Based on published studies, a grid box with dimensions of approximately 20 x 20 x 20 Å is often sufficient to cover the active site of CYP1B1. For the 3PM0 structure, a binding site sphere with a 10 Å radius centered on the co-crystallized α-naphthoflavone can be used to define the grid.[4]

Part 4: Running the Docking Simulation with AutoDock Vina

- Create a Configuration File:
  - AutoDock Vina requires a text file (e.g., conf.txt) that specifies the input files and search parameters. An example is provided below:
- Execute AutoDock Vina:
  - Run the docking simulation from the command line using the following command: vina --config conf.txt --log log.txt

Part 5: Analysis of Docking Results

- Examine the Output:
  - AutoDock Vina will generate an output PDBQT file (output.pdbqt) containing the predicted binding poses of the ligand, ranked by their binding affinity (in kcal/mol).
- Visualize and Analyze Interactions:
  - Use molecular visualization software to view the docked poses within the CYP1B1 active site.
  - Analyze the interactions between the top-ranked poses and the protein, identifying key hydrogen bonds, hydrophobic interactions, and π-π stacking with active site residues.

© 2025 BenchChem. All rights reserved.

Mandatory Visualizations

CYP1B1-Mediated Signaling Pathways

CYP1B1 has been shown to influence several signaling pathways implicated in cancer progression, including the Wnt/β-catenin and uPA/uPAR pathways.

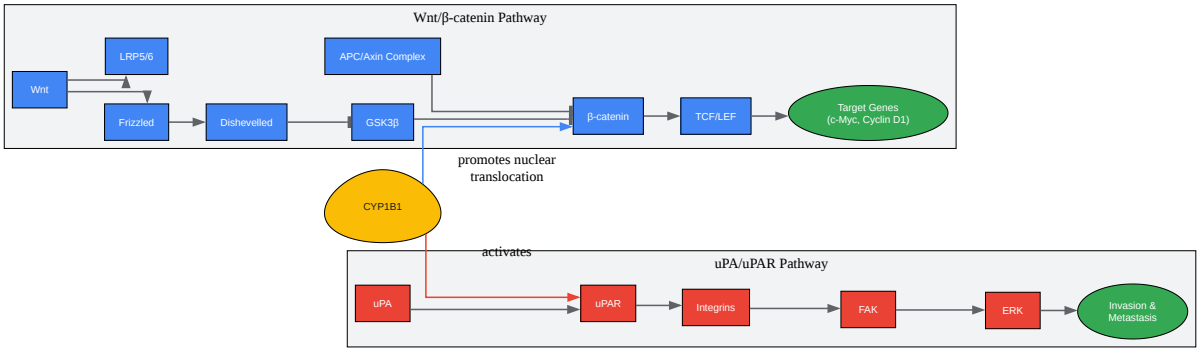

Click to download full resolution via product page

CYP1B1 signaling crosstalk.

Molecular Docking Workflow

The following diagram illustrates the key steps in a typical molecular docking workflow.

© 2025 BenchChem. All rights reserved.

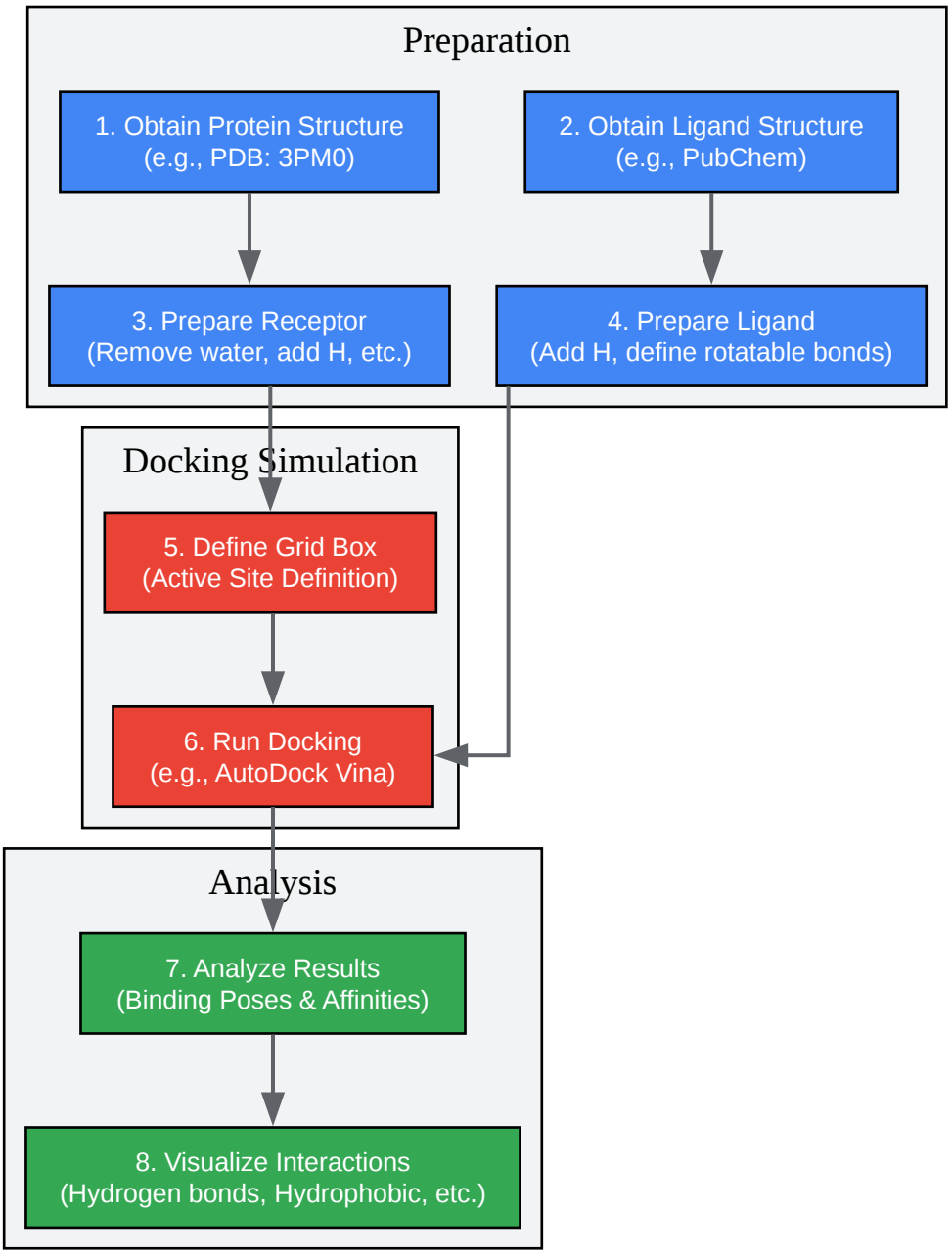

Click to download full resolution via product page

Molecular docking workflow.

Need Custom Synthesis?

BenchChem offers custom synthesis for rare earth carbides and specific isotopiclabeling.

Email: info@benchchem.com or Request Quote Online.

© 2025 BenchChem. All rights reserved.

References

- 1. rcsb.org [rcsb.org]
- 2. rcsb.org [rcsb.org]
- 3. Machine Learning Enabled Structure-Based Drug Repurposing Approach to Identify Potential CYP1B1 Inhibitors - PMC [pmc.ncbi.nlm.nih.gov]
- 4. mdpi.com [mdpi.com]

- To cite this document: BenchChem. [Application Notes and Protocols for Molecular Docking Simulation of CYP1B1 Inhibitors]. BenchChem, [2025]. [Online PDF]. Available at: [https://www.benchchem.com/product/b15573256#molecular-docking-simulation-of-cyp1b1-inhibitors]

Disclaimer & Data Validity:

The information provided in this document is for Research Use Only (RUO) and is strictly not intended for diagnostic or therapeutic procedures. While BenchChem strives to provide accurate protocols, we make no warranties, express or implied, regarding the fitness of this product for every specific experimental setup.

Technical Support: The protocols provided are for reference purposes. Unsure if this reagent suits your experiment? [Contact our Ph.D. Support Team for a compatibility check]

Need Industrial/Bulk Grade? Request Custom Synthesis Quote

BenchChem

Our mission is to be the trusted global source of essential and advanced chemicals, empowering scientists and researchers to drive progress in science and industry.

Contact

Address: 3281 E Guasti Rd

Ontario, CA 91761, United States

Phone: (601) 213-4426

Email: info@benchchem.com

© 2025 BenchChem. All rights reserved.